BROCHURE

Steel City® Pre-Fab

When larger projects require smarter solutions

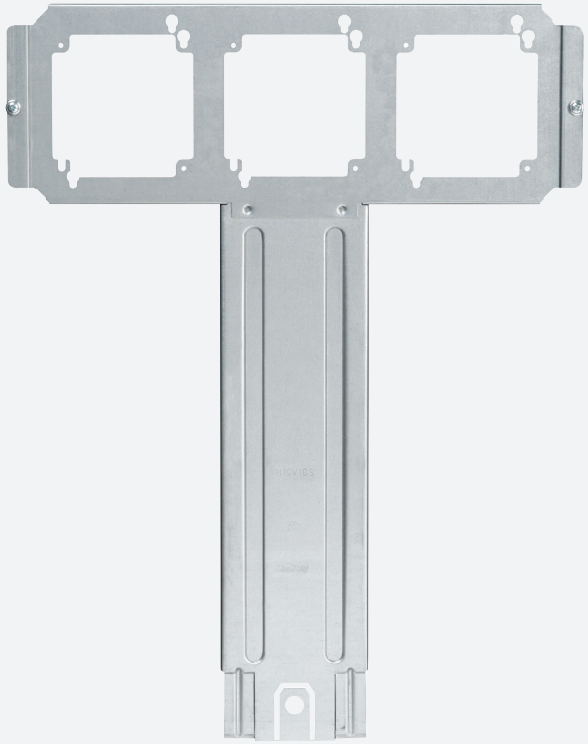

Also available

- Box-to-stud mounting bracket
- Adjustable box brackets
- Adjustable mud rings
- Screwed-on conduit support

Struggling to increase the productivity of your contracting business? Respond to high labour costs and tight schedules by utilizing products with productivity “designed in”.

Steel City brackets

Ideal with Iberville® boxes

Pre-Fab brackets

Smart solutions that save installation time

Pre-Fab is the powerful, comprehensive rough-in solution that allows you to order Steel City prefab brackets and have them delivered directly to the shop or job site for fast installation. Pre-Fab can help ensure a quality installation every time!

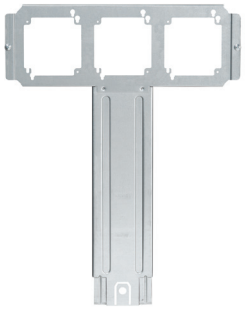

—
01

—
02

—
03

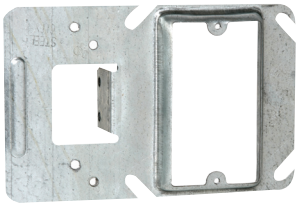

—
04

—
05

—
01 Floor mount T bracket
—
02 Stud-to-stud mounting bracket
—
03 Box-to-stud mounting bracket
—
04 Box support cover
—
05 Adjustable mud ring

Features

- Saves and simplifies time on-site
- Reduces on-site labour costs
- Made from high quality Steel City components
- Reduce inventory

If your project is substantial or repetitive, such as; a hospital, condominium complex, office building or hotel, look to our off the shelf pre-fab bracket solutions products to get the job done. Steel City Pre-Fab assemblies are made from high-quality Steel City components.
They are designed to work together with Iberville boxes and mud rings, whether you choose to customize your own assembly or order one of our popular standard combinations.

Floor mount T bracket

Consistent box locations and box height every time

Integral mounting screws
Reduce installation time

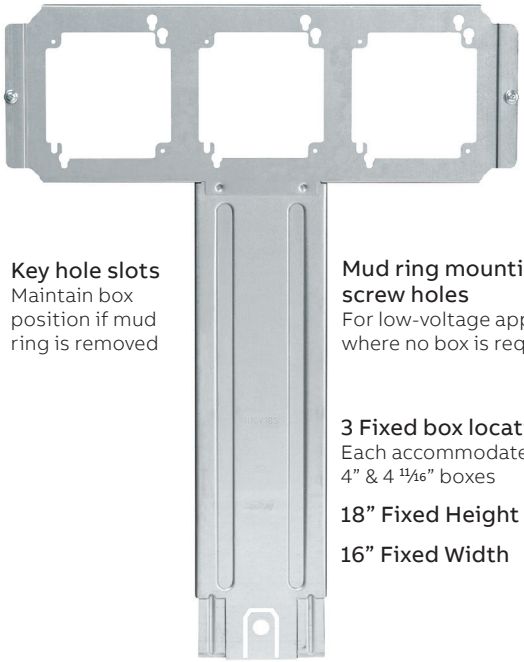

Key hole slots
Maintain box position if mud ring is removed

Mud ring mounting screw holes
For low-voltage applications where no box is required

3 Fixed box locations
Each accommodates both 4" & 4 11/16" boxes

18" Fixed Height

16" Fixed Width

Consistency results in efficiency and labor savings on the job. With three fixed box locations and a fixed height of 18", the Steel City Pre-Fab T bracket provides a consistent installation every time. For added efficiency, the bracket includes integral mounting screws that help reduce installation time. A handy locator tab at the base of the bracket saves you the time of looking for installed boxes that have been hidden by wall coverings. The base also features unique floor track tabs. The inner tab slides in front of the floor track, and the two outer tabs slide behind the floor track to provide stability when positioning the bracket.

Stability ridges
For added support

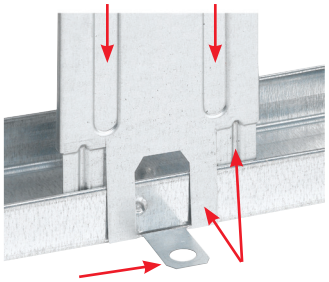

Locator tab
Helps locate installed boxes hidden by wall coverings

Floor track tabs
Provides stability when positioning the bracket

Ideal with Iberville boxes

- **BC52151-K**
- **BC52171-K**
- **CI72151-K**
- **BC72171-K**

Cat. No.	Description	Std. Ctn.
H16V18S	Pre-Fab T bracket	10

Extension plate bracket

SSF-SV18

- Improved bracket with bendable stabilizer leg for use on 2 ½" and 3 ⅝" metal studs
- Mounts outlet boxes 18" offset from either a metal stud track or a stud
- When mounted, drywall ring is brought to within 1/8" of drywall every time and will not budge or break out drywall
- Mounts 4" or 4 11/16" outlet boxes, 1 ½" or 2 ⅛" deep

Ideal with Iberville boxes

- **BC52151-K**
- **BC52171-K**
- **CI72151-K**
- **BC72171-K**

Cat. No.	Description	Std. Ctn.
SSF-SV18	Extension plate bracket, 18" height	50

Stud-to-stud mounting brackets

SBO16

SBO24

- Constructed of 24-gauge steel
- Pre-measured on center for 16” (SBO16) or 24” (SBO24) stud spacing
- SBO16 accepts three 4” square or two 4 11⁄16” boxes (deep or shallow)
- SBO24 accepts five 4” square or four 4 11⁄16” boxes (deep or shallow)
- Adjustable bracket also available for non-standard measurement (12” to 25”)
- Can be mounted at any height to meet individual project requirements
- Versatile, open design enables mounting of box in any location across horizontal plane between studs
- Device cover (mud ring) mounts to front of bracket to set box in desired location
- Stamped rule on bracket with 1/4”, 1/2”, and 1” markings

SBO24 mounted to 24” studs with one 4” square box installed

SBO24 mounted to 24” studs with five 4” square boxes (full capacity) installed

Ideal with Iberville boxes

- **BC52151-K**
- **BC52171-K**
- **CI72151-K**
- **BC72171-K**

Cat. No.	Description	Std. Ctn.
SBO16	16” stud-to-stud horizontal mounting bracket	25
SBO24	24” stud-to-stud horizontal mounting bracket	25
SBOADJ	Adjustable bracket 12-25”	25

Iberville boxes to complete your installation

01

02

03

04

01 BC52151-K 4 inches square box 1 ½ inches depth 21 cubic inches.

02 BC52171-K 4 inches square box 2 ⅛ inches depth 30 cubic inches.

03 CI72151-K 4 11⁄16 inches square box 1 ½ inches depth 30 cubic inches.

04 BC72171-K 4 11⁄16 inches square box 2 ⅛ inches depth 42 cubic inches.

Stud-to-stud mounting brackets — fixed box position

H16S

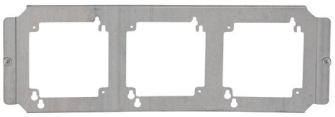

H24S

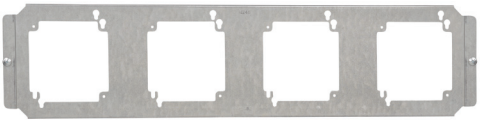

- Supports electrical boxes, plaster rings, or low-voltage devices from one bracket
- Accommodates 4” or 4 $^{11}/_{16}$” boxes
- Stud brackets allow box mounting in all four 90° orientations

Ideal with Iberville boxes

- **BC52151-K**
- **BC52171-K**
- **CI72151-K**
- **BC72171-K**

Cat. No.	Description	Std. Ctn.
H16S	Box mounting bracket for between studs, 16” stud spacing	25
H24S	Box mounting bracket for between studs, 24” stud spacing	25

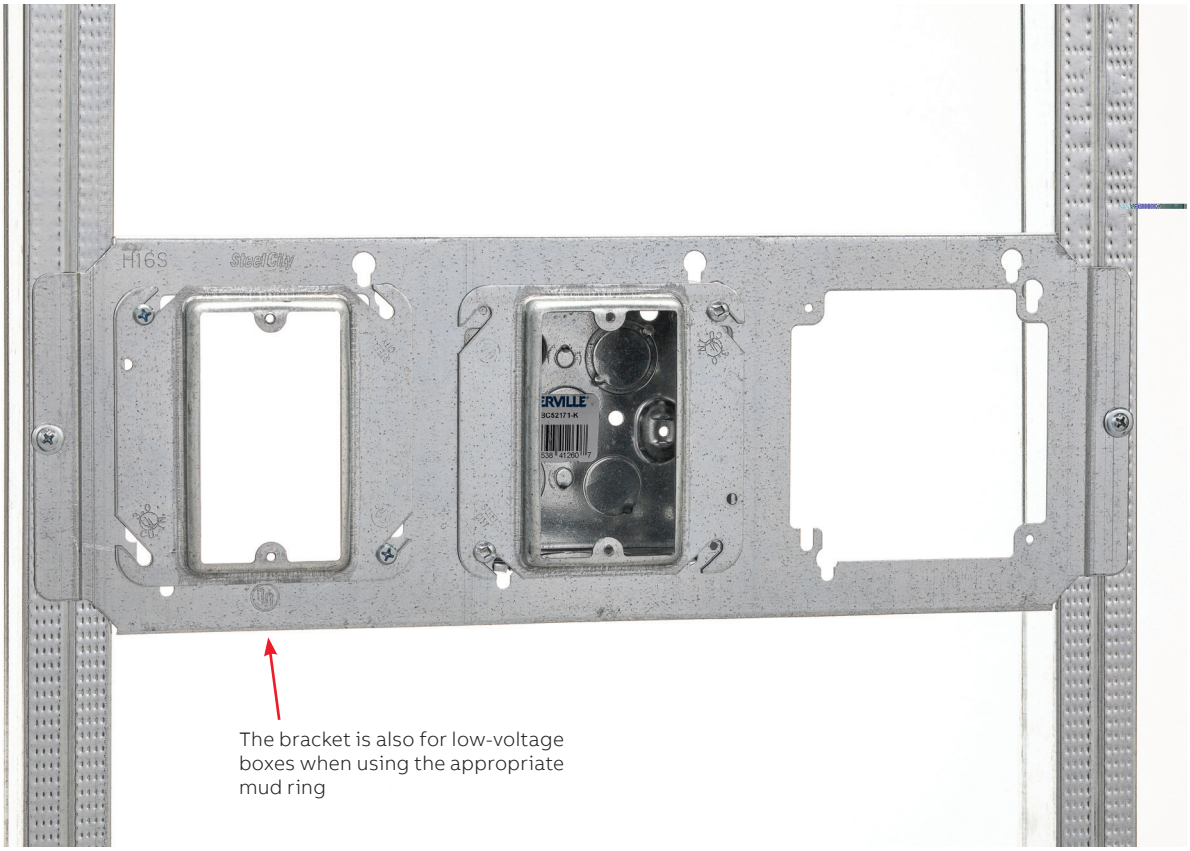

The bracket is also for low-voltage boxes when using the appropriate mud ring

Box-to-stud mounting bracket with far-side and cable support

Three products in one

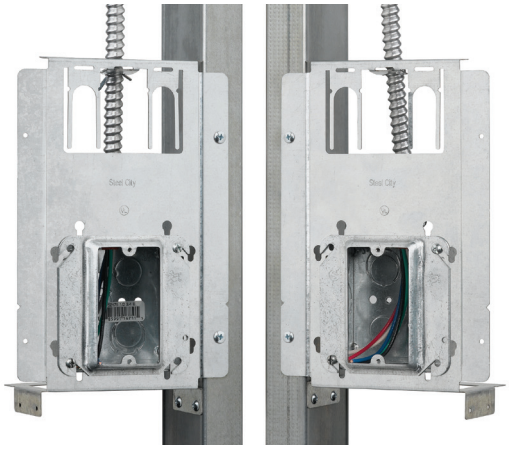

Can be mounted either left or right of the stud

The savings can add up, particularly on a large job, when a box bracket, far-side support, and cable support are combined in one product to reduce your labor and inventory costs. It is designed for maximum flexibility with flanges for either left or right stud mount, and compatibility with both 4” and 4 11/16” boxes.

- Built-in cable support secures cable 6” above the box
- Flexible design accommodates both 4” and 4 11/16” boxes
- Key-hole box mounting slots maintain box position if mud ring needs to be removed
- Provides clear access to knockouts once the box is installed for installation of fittings
- Mounts to either side of the stud

Clear access to knock-outs and/or fittings
Once box is installed

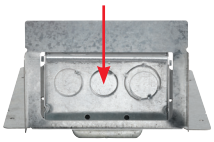

Bottom view of bracket with box installed

Cable support and far-side support
Combined in one product

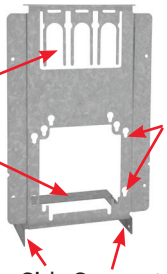

Key-hole box mounting slots
Maintain box position if mud ring needs to be removed

Side Supports
For added security

Built-in cable support
Secures cable 6” above the box

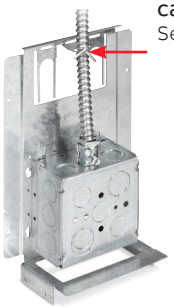

Back view of bracket with box, fitting and cable installed

Ideal with Iberville boxes

- BC52151-K
- BC52171-K
- CI72151-K
- BC72171-K

Cat. No.	Description	Std. Ctn.
SSF-SH2346-CS	Pre-fab box bracket with far-side and cable support	50

Box-to-stud mounting bracket

SSF-SH2346

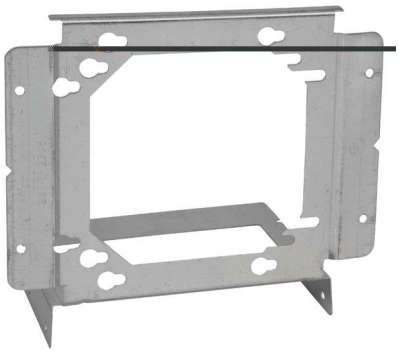

- Attaches 4” and 4 11/16” electrical boxes to metal stud
- Support leg can be attached to stud to eliminate movement box in wall
- Attaches to metal stud using self-tapping screws and screw gun
- One part mounts boxes for 2 ½” and 3 ⅝” studs, which means less inventory

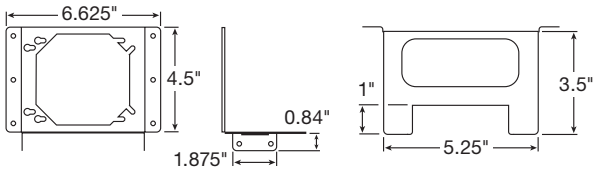

Ideal with Iberville boxes

- BC52151-K
- BC52171-K
- CI72151-K
- BC72171-K

Cat. No.	Description	Std. Ctn.
SSF-SH2346	Bracket for mounting 4” or 4 11/16” box to 2 ½” and 3 ⅝” stud	100

Box support covers

52CM14-5/8

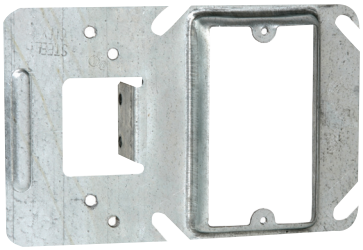

- Combines a box-to-stud mounting bracket with a device cover in one easy-to-use product
- Designed for use with 4” square boxes
- Used with steel studs
- Cover raised 1/2”, 5/8”, or 3/4”
- Designed for one or two devices

Ideal with Iberville boxes

- **BC52151-K**
- **BC52171-K**

Cat. No.	Raised	No. of devices	Cu. in. cap.	Std. Ctn.
52CM13	1/2”	1	3.0	25
52CM14-5/8	5/8”	1	4.0	25
52CM14	3/4”	1	5.0	25
52CMD17	1/2”	2	6.3	25
52CMD18-5/8	5/8”	2	7.3	25
52CMD18	3/4”	2	9.0	25

Adjustable box brackets

SSF-SG16A

- Designed for metal studs 16” or 24” on center
- Can also be adjusted for non-standard stud spacing
- Adjustable tabs accommodate 1 ½” or 2 ⅛” box depths
- Enables mounting of multiple boxes
- Installs easily—dimples provide a starting point for screws

Cat. No.	Description	Stud spacing	Box depth	Std. Ctn.
SSF-SG16A	16” Adjustable Box Bracket	11”–18”	1 ½” or 2 ⅛”	50
SSF-SG24A	24” Adjustable Box Bracket	17”–26”	1 ½” or 2 ⅛”	50

Adjustable mud rings

52-C-ADJ

Adjustable mud rings
Available in both single- and two-gang.
UL-listed mud rings feature an inner ring that adjusts from 1/2” to 1 ½” in depth to accommodate various drywall thicknesses. Marked with a measured rule and equipped with two adjustment screws, the inner ring can be set to the anticipated depth prior to installation and then easily adjusted after drywall installation to accommodate any variation in depth (1/2” to 1 ½”).

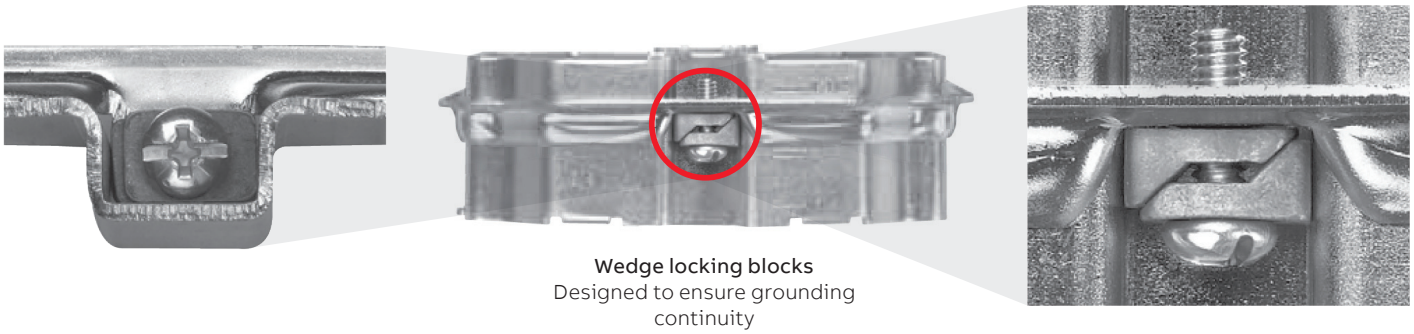

Wedge locking blocks
Designed to ensure grounding continuity

Adjustable mud ring installation/adjustment steps:

—
01

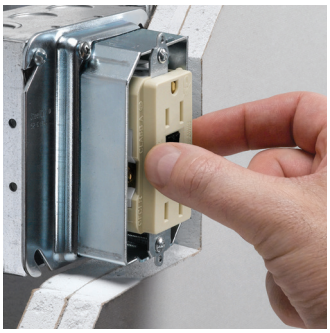

—
02

—
03

—
01 Loosen… The two adjustment screws located on opposing coners of the mud ring.
—
02 Adjust… Inner ring to be flush with wall surface.
—
03 Re-tighten…Adjustment screws.

Ideal with Iberville box
- **BC52171-K**

Cat. No.	Description	Std. Ctn.
52CADJ	Single-gang adjustable mud ring, 1/2” to 1 ½”	25
52CADJ2*	Two-gang adjustable mud ring, 1/2” to 1 ½”	20

* Choose Steel City box 521711234ECN

Screwed-on conduit support

SSF-SS 1/2 3/4

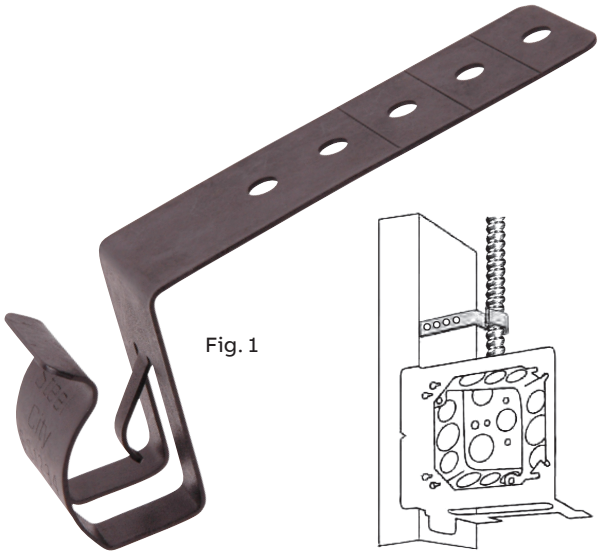

Fig. 1

- Supports 1/2” and 3/4” EMT conduit and AC cable
- Works with wood or metal stud
- Preset bend provides alignment with knockouts for 1 ½”-deep boxes or 2 ⅛”-deep boxes

Cat. No.	Fig. No.	Description	Std. Ctn.
SSF-SS 1/2 3/4	1	1/2” and 3/4” EMT conduit and AC to metal or wood stud. For 1 ½” deep box.	100
SSF-SS 1/2 3/4D		1/2” and 3/4” EMT conduit and AC to metal or wood stud. For 2 ⅛” deep box.	100

Accessories to complete your pre-fab installation

Mud rings for 4'' boxes	No. of devices	Description
52 C 3 1/2-25	-	Mud ring 4 x 4, 1/2" raised, round
52 C 13	1	Mud ring 4 x 4, 1/2" raised
52 C 14	1	Mud ring 4 x 4, 3/4" raised
52 C 14 5/8	1	Mud ring 4 x 4, 5/8" raised
52 C 15	1	Mud ring 4 x 4, 1" raised
52 C 16	1	Mud ring 4 x 4, 1 ¼" raised
BC52-C-17	2	Mud ring 4 x 4, 1/2" raised
52 C 18	2	Mud ring 4 x 4, 3/4" raised
52-C-18-5/8-25	2	Mud ring 4 x 4, 5/8" raised
52 C 19	2	Mud ring 4 x 4, 1" raised
52 C 21	2	Mud ring 4 x 4, 1 ¼" raised
Tile rings for 4'' boxes	**No. of devices**	**Description**
52 C 49 1/2	1	Tile ring 4 x 4, 1/2" raised
52 C 49 3/4	1	Tile ring 4 x 4, 3/4" raised
52 C 49 1	1	Tile ring 4 x 4, 1" raised
52 C 49 1-1/4	1	Tile ring 4 x 4, 1 ¼" raised
52 C 50 1-1/2-25	1	Tile ring 4 x 4, 1 ½" raised
52 C 51 2-25	1	Tile ring 4 x 4, 2" raised
52-C-52-1/2	2	Tile ring, 1/2" raised
52-C-52-5/8	2	Tile ring 4 x 4, 5/8" raised
52-C-52-3/4	2	Tile ring 4 x 4, 3/4" raised
52-C-52-1	2	Tile ring 4 x 4, 1" raised
52-C-52-1-1/4	2	Tile ring 4 x 4, 1 ¼" raised
52-C-53-1-1/2	2	Tile ring 4 x 4, 1 ½" raised
52-C-54-2	2	Tile ring 4 x 4, 2" raised
Mud rings for 4 $^{11}/_{16}$'' boxes	**No. of devices**	**Description**
CI72-C-10	1	Mud ring 4 $^{11}/_{16}$ x 4 $^{11}/_{16}$, 1/8" raised
CI72-C-13	1	Mud ring 4 $^{11}/_{16}$ x 4 $^{11}/_{16}$, 1/2" raised
72 C 14	1	Mud ring 4 $^{11}/_{16}$ x 4 $^{11}/_{16}$, 3/4" raised
72 C 14 5/8	1	Mud ring 4 $^{11}/_{16}$ x 4 $^{11}/_{16}$, 5/8" raised
72 C 17	2	Mud ring 4 $^{11}/_{16}$ x 4 $^{11}/_{16}$, 1/2" raised
72 C 18 5/8	2	Mud ring 4 $^{11}/_{16}$ x 4 $^{11}/_{16}$, 5/8" raised

—
01 52 C 13
—
02 52 C 18
—
03 52 C 49 1
—
04 52-C-52-1/2
—
05 72 C 14

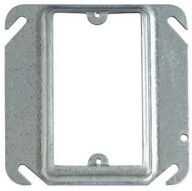

—
01

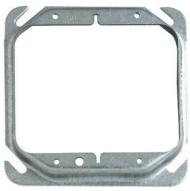

—
02

—
03

—
04

—
05

—
Canada
ABB Installation Products Ltd.
Electrification Business
700 Thomas Avenue
Saint-Jean-sur-Richelieu, Quebec J2X 2M9
Tel.: +1 (450) 347 5318
Toll Free: +1 (800) 362 2952
Fax: +1 (450) 347 1976

tnb.ca.abb.com

© Copyright 2019 ABB. All rights reserved.
Specifications subject to change without notice.

7TKK000611 06/2019